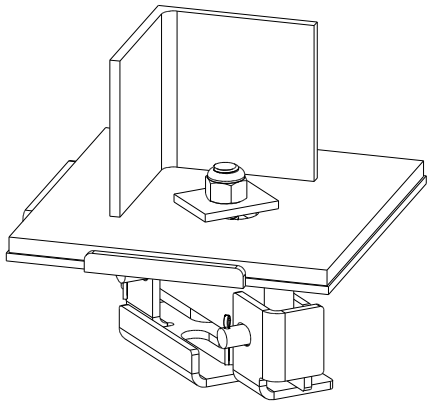

SCALE 0.200

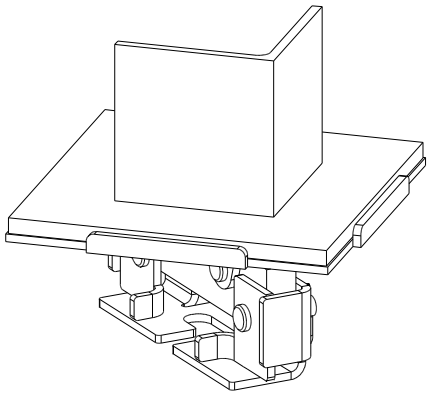

SCALE 0.200

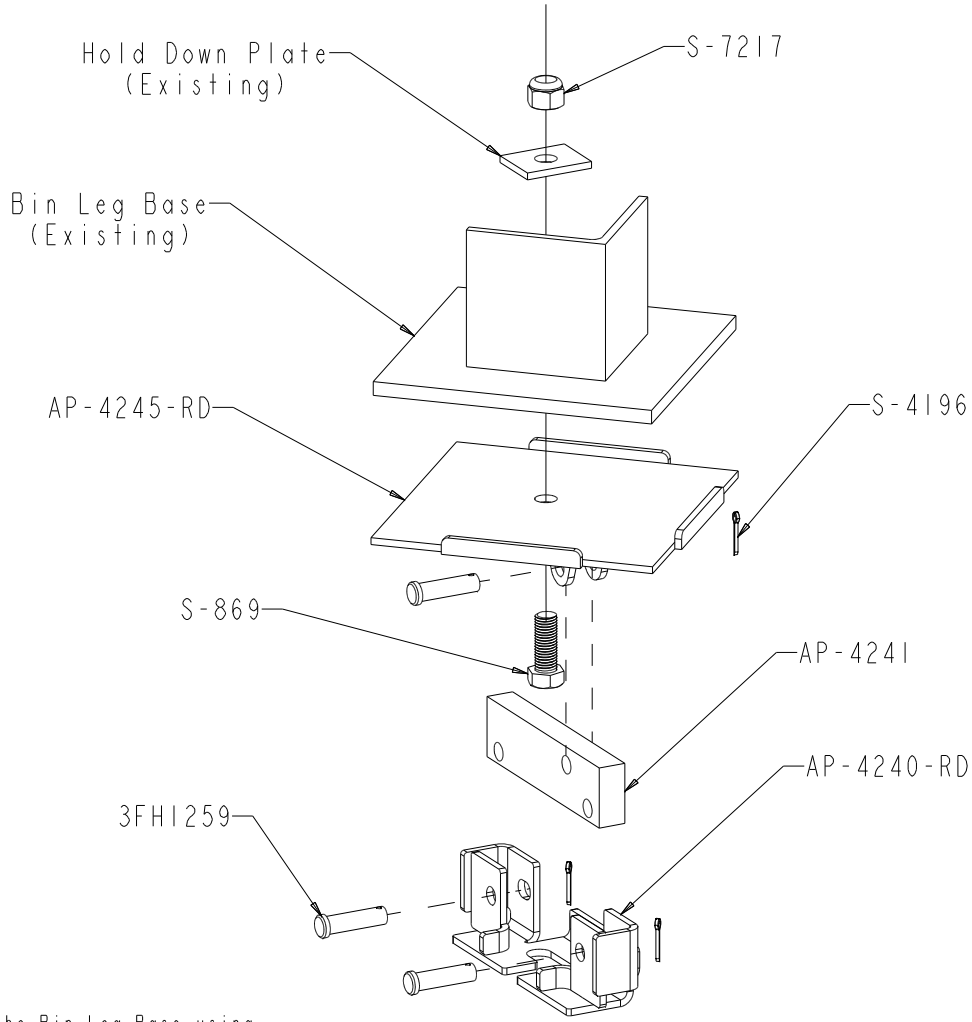

1) Secure AP-4245-RD (Load Cell Adapter Assembly) to the bottom of the Bin Leg Base using S-869 (3/4-10 X 2" Bolt), existing Hold Down Plate, and S-7217 (3/4-10 Nylock Nut).
2) Use one (1) 3FH1259 (5/8 X 2-1/2" Clevis Pin) and one (1) S-4196 (5/32 X 1" Cotter Pin) to attach the AP-4241 (Load Cell) to the AP-4245-RD (Load Cell Adapter Assembly).
3) Slide AP-4240-RD (Load Cell Base Assembly) onto existing bolt in pad and align with AP-4241 (Load Cell).
4) Lower the Bin Leg into position and use two (2) 3FH1259 (5/8 X 2-1/2" Clevis Pins) and two (2) S-4196 (5/32 X 1" Cotter Pins) to assemble the AP-4241 (Load Cell) to the AP-4240-RD (Load Cell Base Assembly).
5) Use existing bolt in pad to secure AP-4240-RD (Load Cell Base Assembly) to the ground.

No.	ECN	Revision Description	Date	By

THE GSI GROUP
Assumption, IL

Engineering Division: AP

15000 LB LOAD CELL ASSEMBLY

INT-4827

TOLERANCES (Unless Noted)
Fractions +/- 1/32"
Decimals +/- .031
Angles +/- 1.00

Sheet 1 of 1		IMW N/A	Drawing No.
Weight Index N/A	Sq. Ft. N/A	Ship Wt. 50.226	PNEG-1497
Drawn By BAS	Date 10-Jan-06	Scale NONE	
Checked By BAS	Date 01/03/06	Work to Dimensions Do Not Scale	