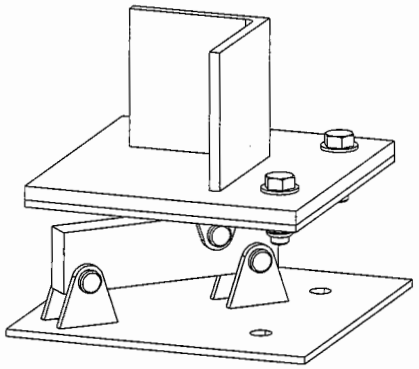

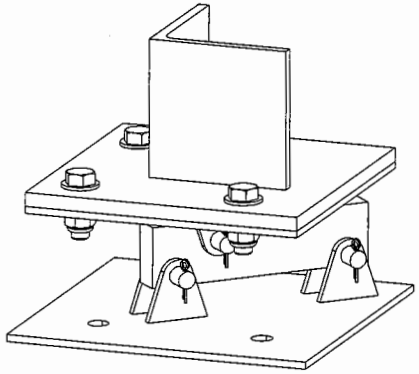

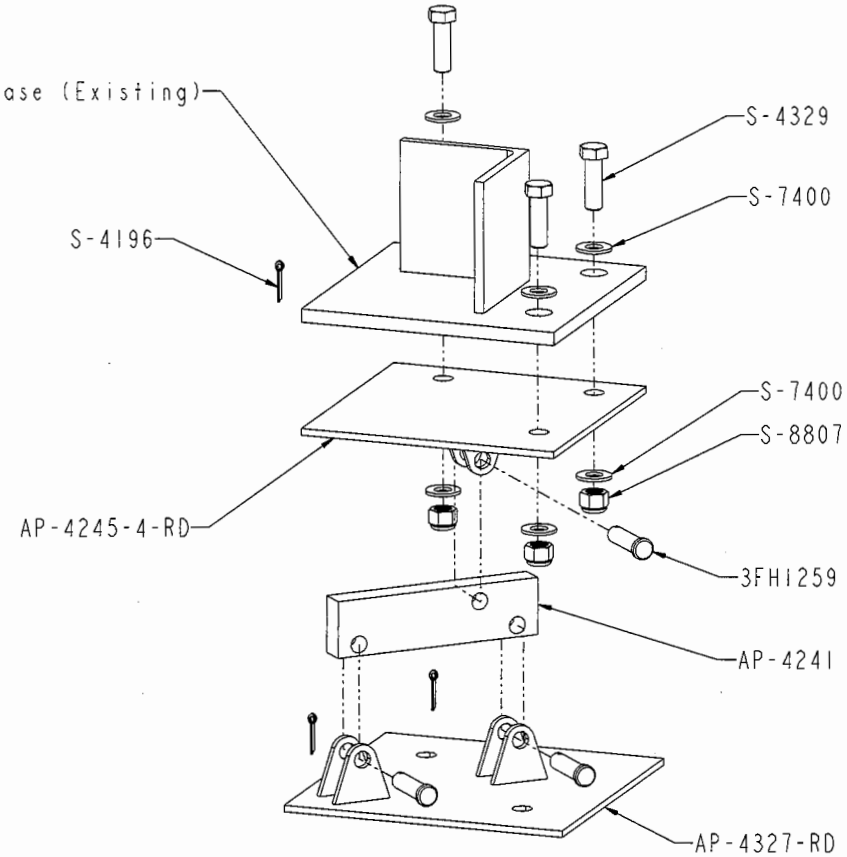

1) Secure AP-4245-4-RD (Load Cell Adapter Assembly) to the bottom of the Bin Leg Base using S-4329 (5/8-11 X 2" Bolts), S-7400 (5/8 Flat Washers), and S-8807 (5/8-11 Nylock Nuts).
2) Use one (1) 3FH1259 (5/8 X 2-1/2" Clevis Pin) and one (1) S-4196 (5/32 X 1" Cotter Pin) to attach the AP-4241 (Load Cell) to the AP-4245-4-RD (Load Cell Adapter Assembly).
3) Place AP-4327-RD (Load Cell Base Assembly) onto existing bolt(s) in pad and align with AP-4241 (Load Cell).
4) Lower the Bin Leg into position and use two (2) 3FH1259 (5/8 X 2-1/2" Clevis Pins) and two (2) S-4196 (5/32 X 1" Cotter Pins) to assemble the AP-4241 (Load Cell) to the AP-4327-RD (Load Cell Base Assembly).
5) Use existing bolts in pad to secure AP-4327-RD (Load Cell Base Assembly) to the ground.

No.	ECN	Revision Description	Date	By

THE GSI GROUP
Assumption, IL
Engineering Division: AP

15000 LB LOAD CELL ASSEMBLY

INT-4827-4

TOLERANCES (Unless Noted)
Fractions +/- 1/32"
Decimals +/- .031
Angles +/- 1.00

Sheet 1 of 1		INR	N/A
Weight Index	N/A	Sq. Ft.	N/A
Drawn By	BAS	Date	24-May-07
Checked By	BAS	Date	01/03/06
Ship Wt.	58.402	Scale	NONE
Work to Dimensions Do Not Scale			

Drawing No.
PNEG-1497-4