GATE TUBE MOUNTING INSTRUCTIONS
FOR AP-2740 AND AP-2740-4.5

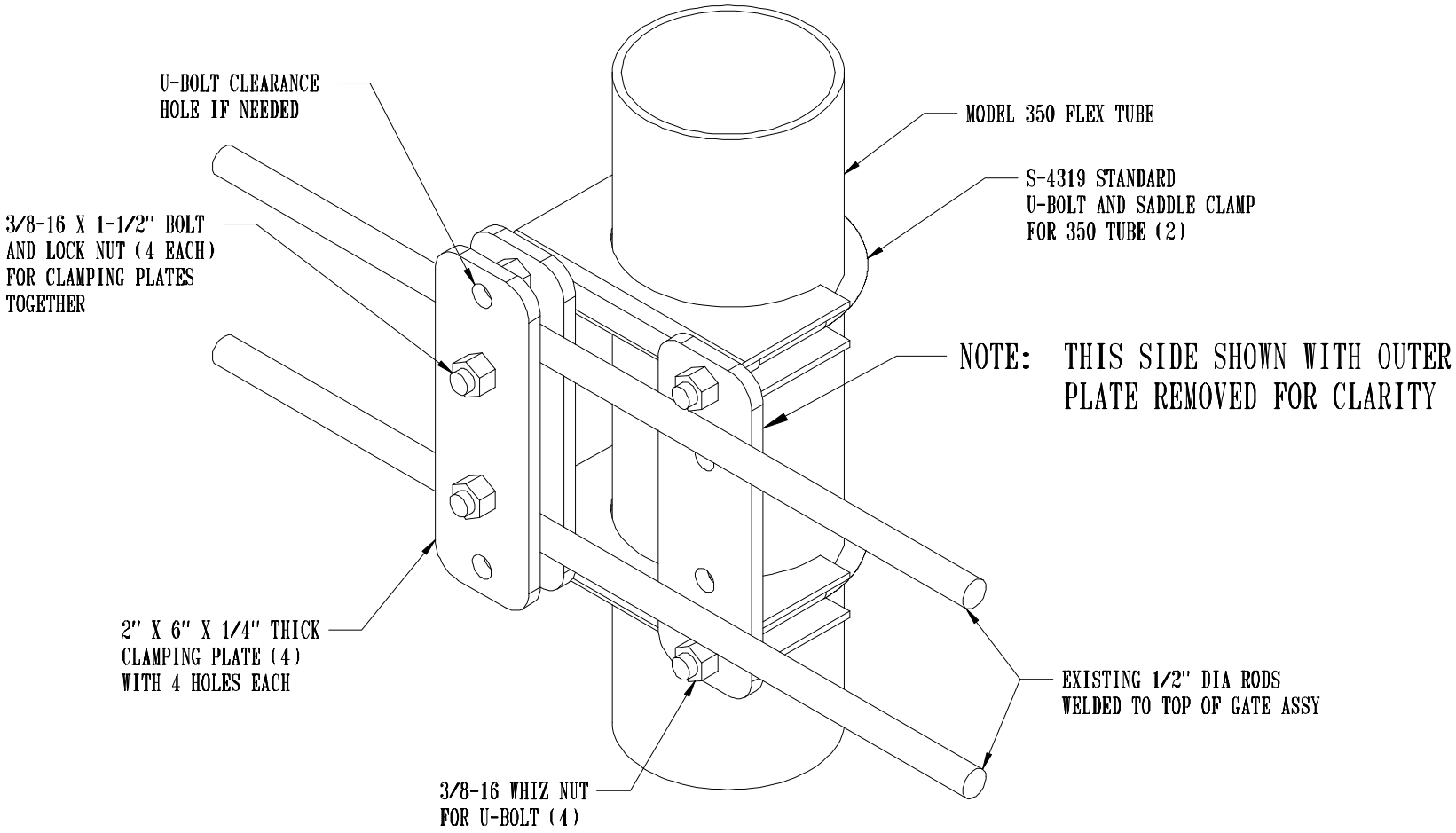

PNEG-1480